TITLE:

Direct Memory Access (DMA)

Course name :

Microprocessor and Microcontroller

Presented by :

Emon Mia-2210676120
Shoreful Islam-2210876121
Tusar Talukdar-2211076131
MD.Salman Akand-2110976160

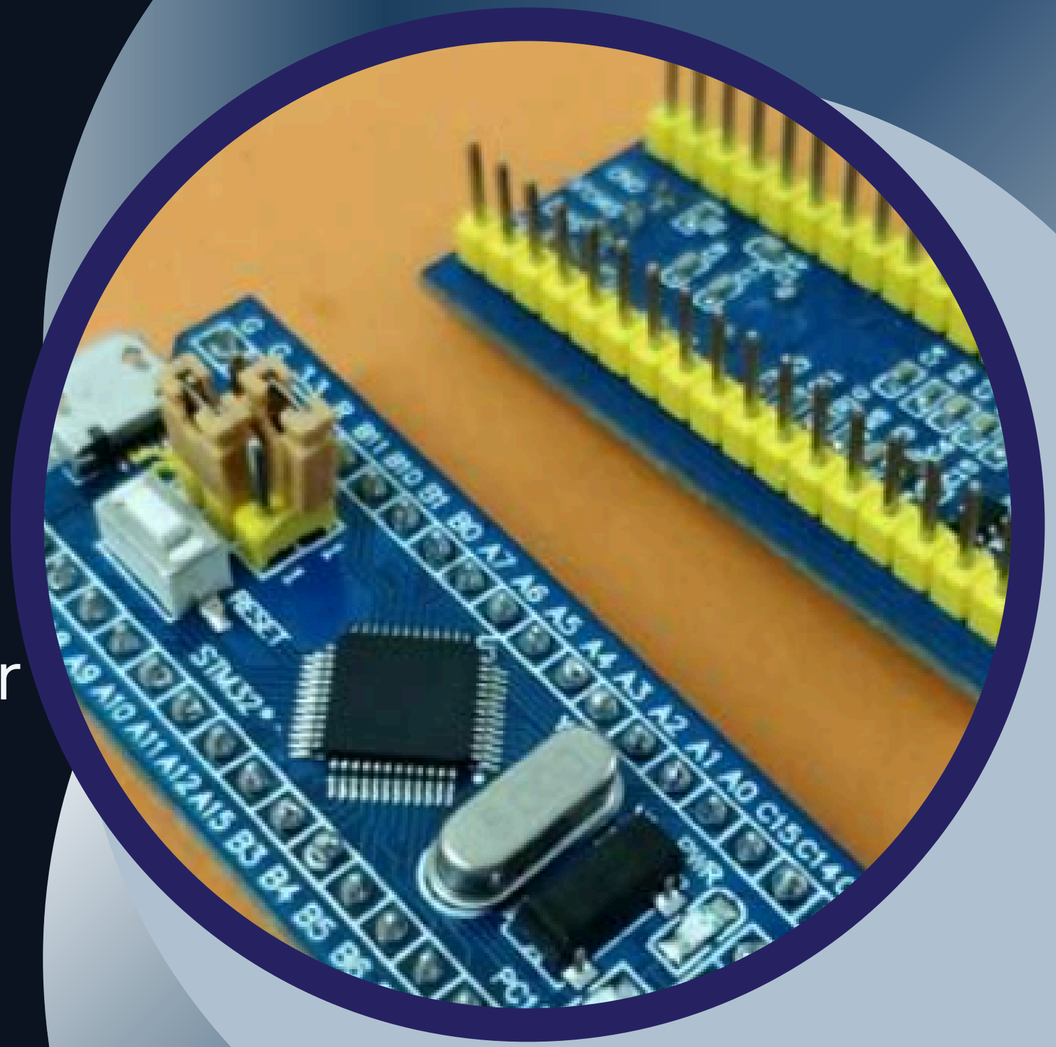

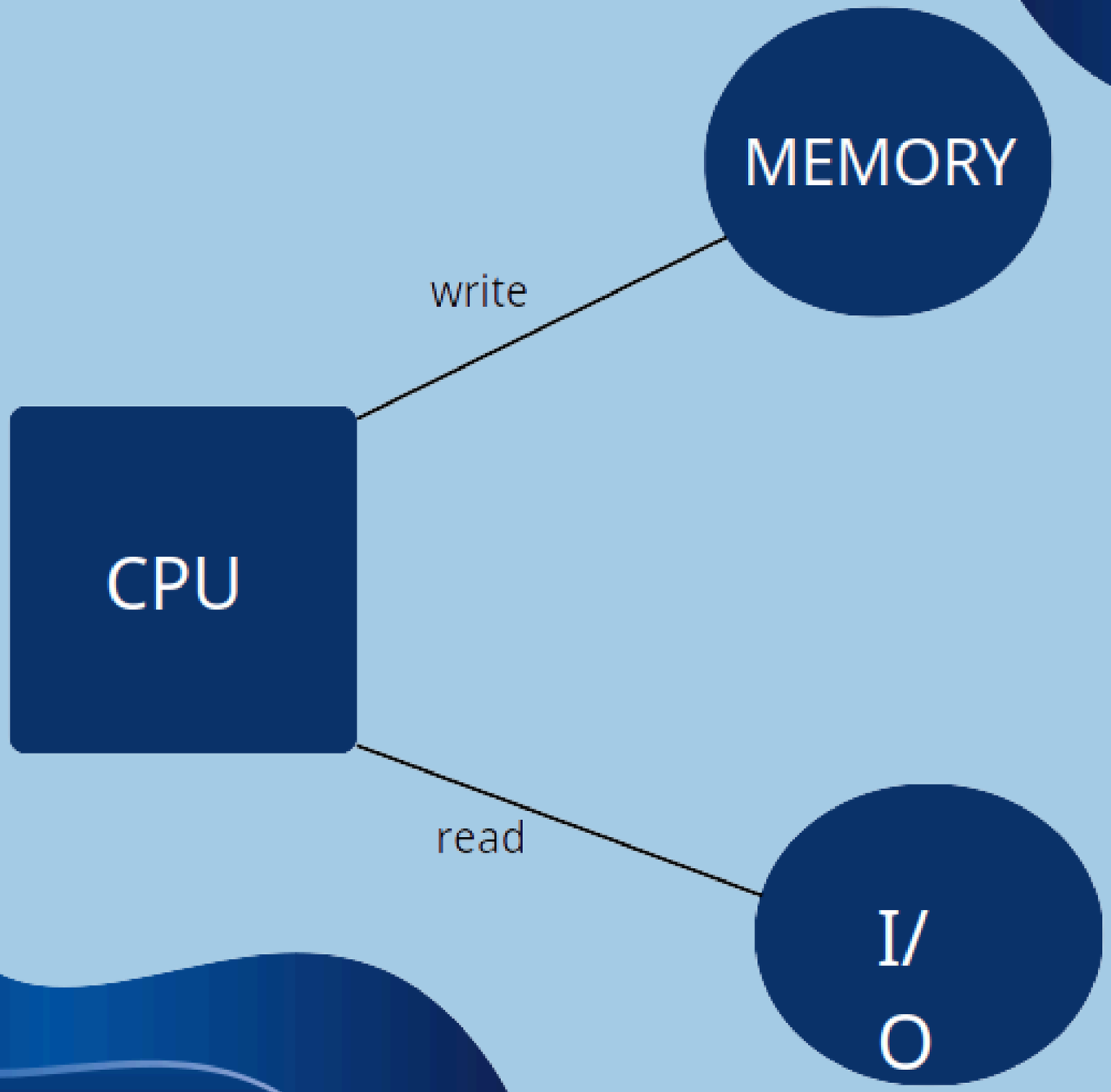
MEMORY
write
CPU
read
I/
O

Introduction to DMA

What is DMA?

Direct Memory Access (DMA) is a technique that allows I/O devices to transfer data directly to or from main memory without continuous CPU involvement.

- 👉 CPU only initializes the transfer.
- 👉 DMA controller handles the rest.

Why DMA is Needed?

Without DMA

- CPU handles every byte of data transfer
- CPU becomes busy
- System performance decreases

With DMA

- CPU is free to perform other tasks
- Faster data transfer
- Better system efficiency

How DMA Works

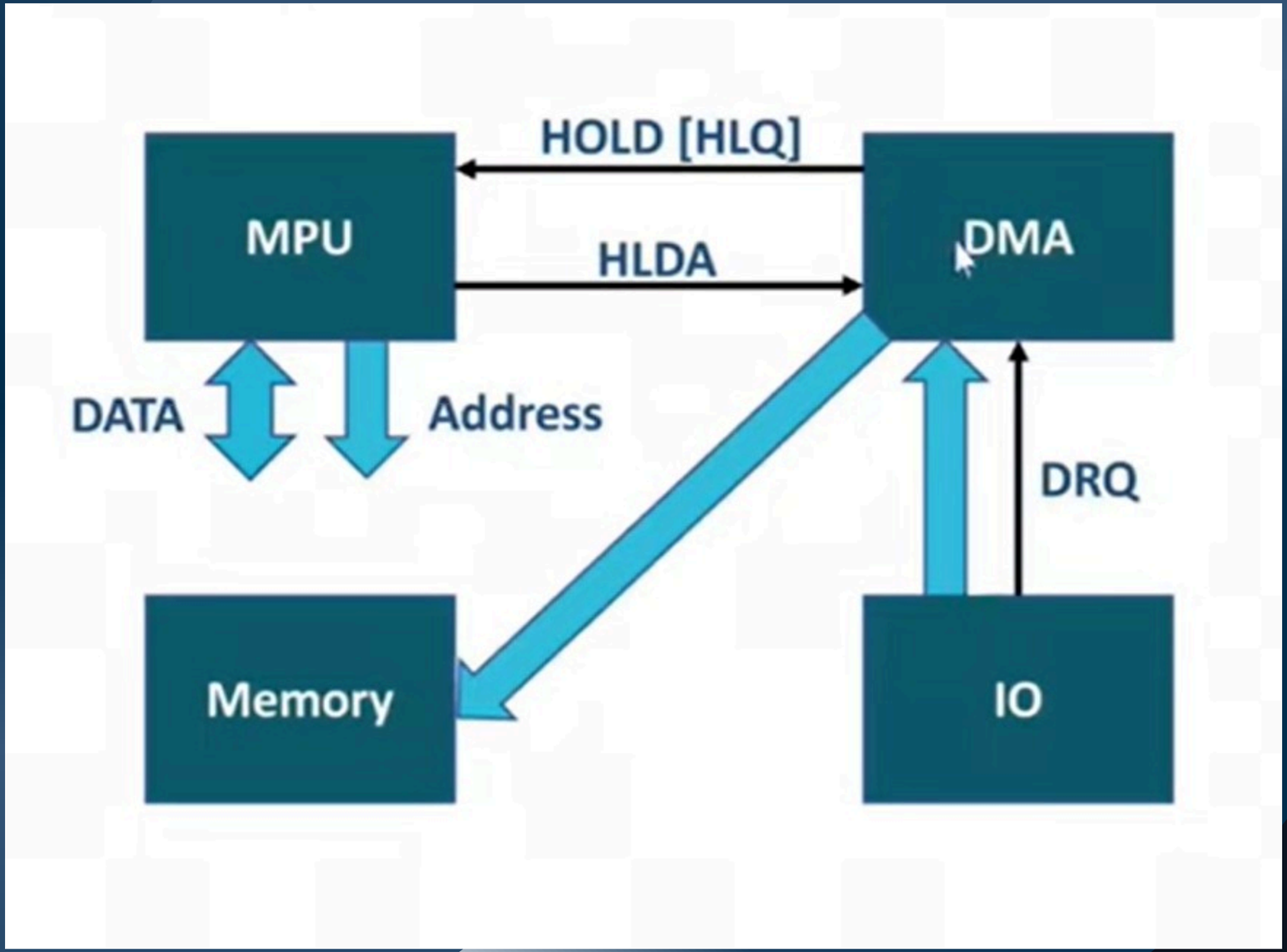

How DMA Works

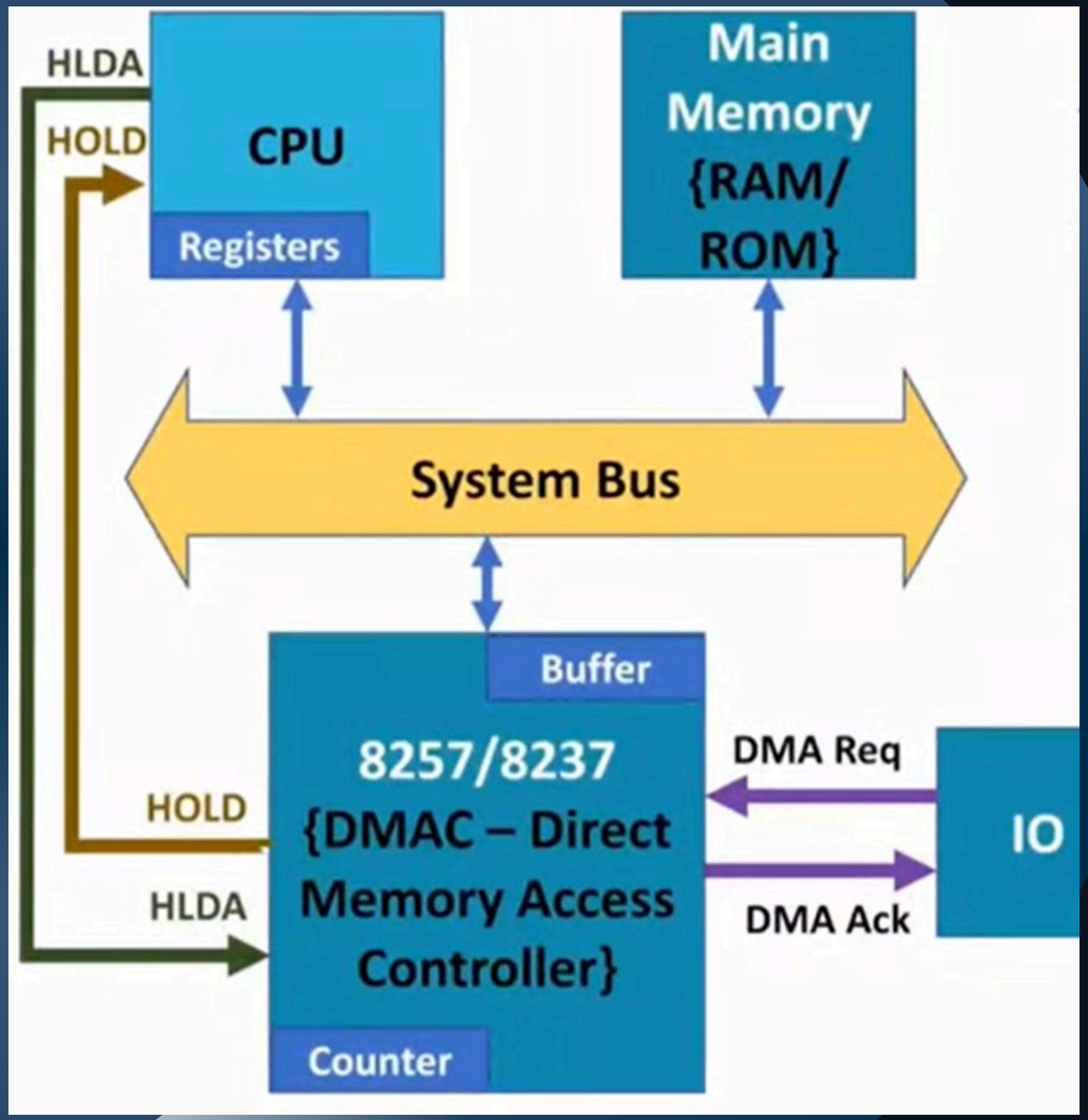

How DMA Works

1. CPU sends DMA request to DMA controller
2. CPU provides:
    a. Source address
    b. Destination address
    c. Data size
3. CPU continues other work
4. DMA transfers data directly
5. DMA sends interrupt after completion

DMA Transfer Modes

Burst Mode

- DMA takes control of bus completely
- Transfers all data at once
- CPU waits

Cycle Stealing Mode

- DMA transfers one word at a time
- CPU and DMA share bus

Transparent Mode

- DMA transfers only when CPU is idle
- No interruption to CPU

Advantages of DMA

- ✓ Reduces CPU workload
- ✓ Faster data transfer
- ✓ Improves system performance
- ✓ Efficient for large data transfer
- ✓ Used in disk, network, graphics operations

Disadvantages of DMA

- ✕ Hardware cost increases
- ✕ Complex control mechanism
- ✕ Bus contention problem
- ✕ Security risk (direct memory access)

Applications of DMA

DMA is used in:

- Hard disk data transfer
- Graphics card (GPU)
- Network cards
- Sound cards
- High-speed data communication

Modern computers, smartphones, and servers use DMA.

CONCLUSION

Direct Memory Access (DMA) improves system performance by allowing direct data transfer between I/O devices and memory without heavy CPU involvement.

It is essential for modern high-speed computing systems.

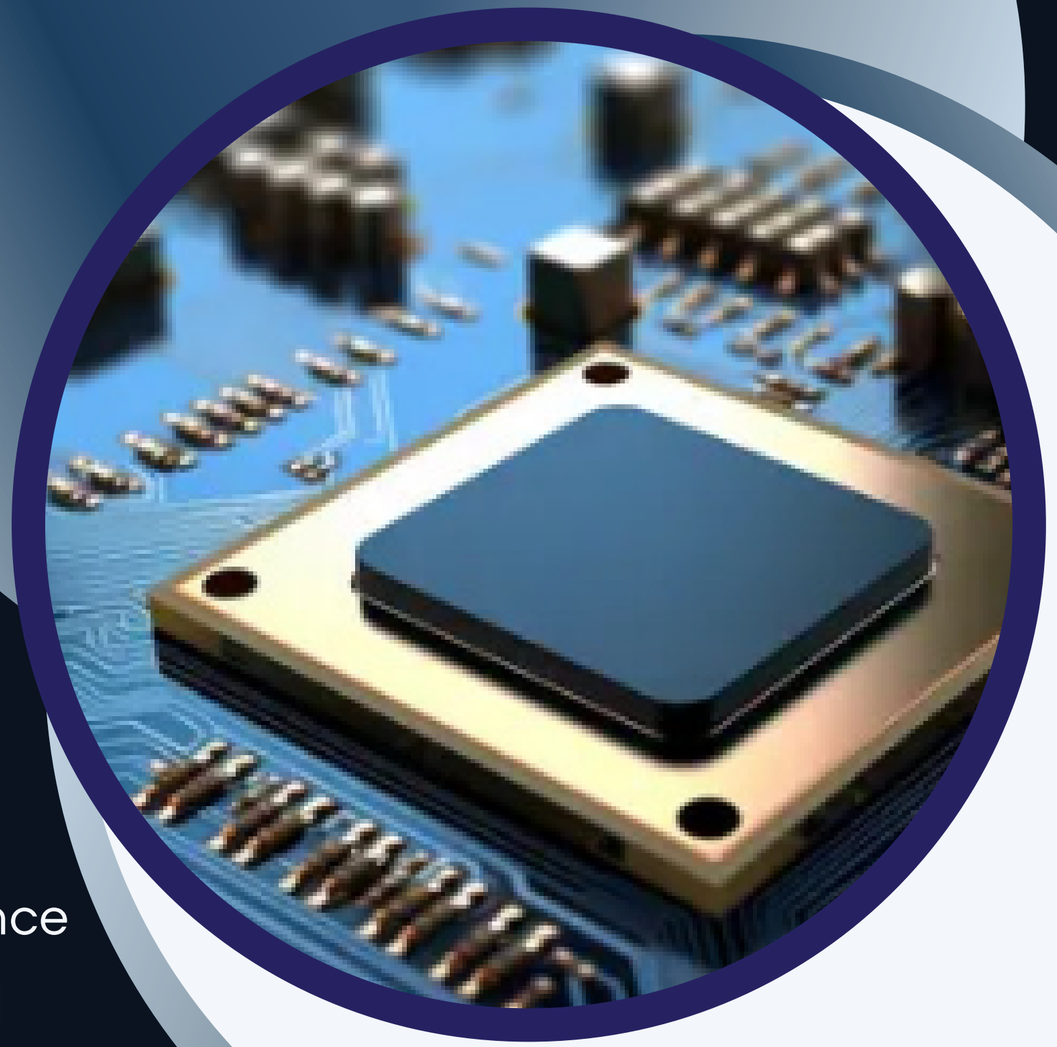

THANK YOU

Presented by :

Emon Mia - 2210676120

Shoreful Islam-2210876121

Tusar Talukdar-2211076131

MD.Salman Akand-2110976160